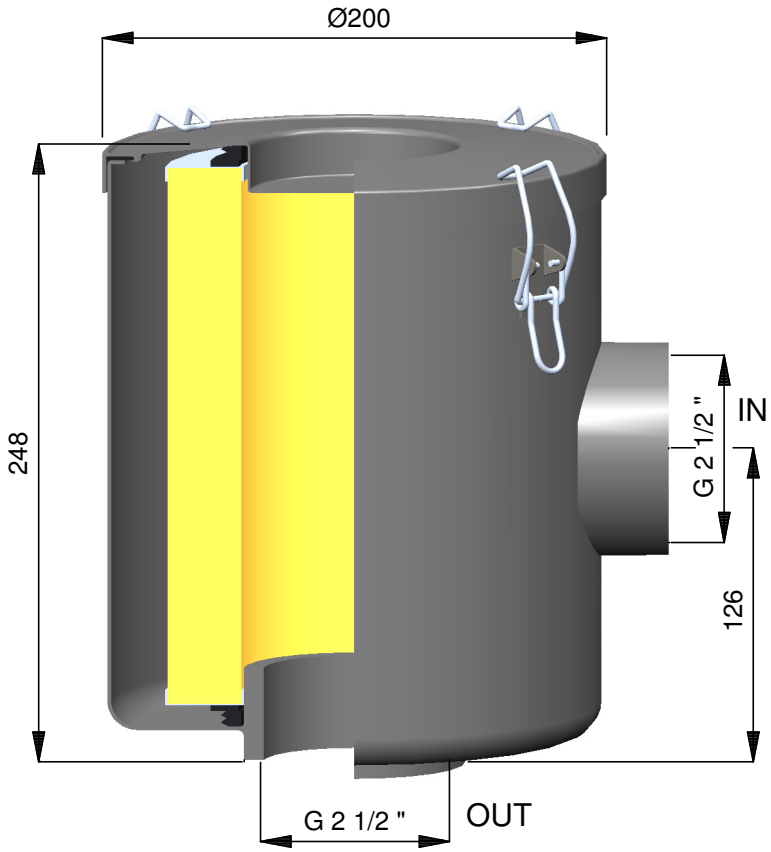

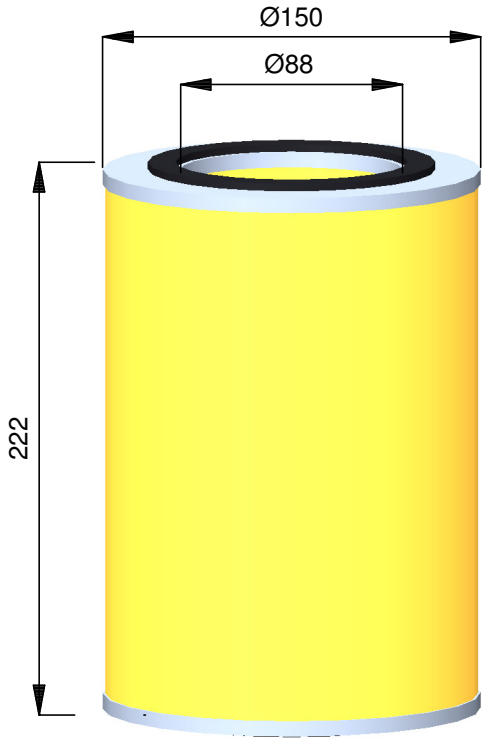

Filter Complete

Part no.:	6799136772
Type:	F.006/1
Connection:	2½ " G
Weight:	3,9 Kg
Housing:	black coated metal

Filter element / replacement cartridge

Part no.:	6799136775
Type:	K.2050
Media:	Pleated paper
Filtration:	5 - 7 µ
Classification:	S (BIA)
Capacity:	360 m³/h
Weight:	0,63 Kg
Covers:	Zinc plated metal

Roughness acc. to ISO 1302	Dimensions tolerated acc. to ISO 129	Tolerances of form and position acc. to ISO 1101	Dimensions in mm.	-	-								-
				A	3D model+details filter&element						BSG		16-02-2016

SIMCO ION™
An ITW Company
www.simco-ion.nl Tel: +31 (0)573 288333

XX
Control dim.

Copyright©
SIMCO (Nederland) BV

Rev.	Description							Chk.	Date
Range [mm]	0,5 - 3	>3 - 6	>6 - 30	>30 - 120	>120 - 315	>315 - 1000	>1000-2000	>2000-4000	
middle	±0,1	±0,1	±0,2	±0,3	±0,5	±0,8	±1,2	±2	
~~rough~~	~~±0,15~~	~~±0,2~~	~~±0,5~~	~~±0,8~~	~~±1,2~~	~~±2~~	~~±3~~	~~±4~~	

Name: Filter complete F.006/1 & Filter element K.2050					Drawn: AGH	Part no.: —
CAD GENERATED NOT AUTOMATICALLY UPDATED	Date: 31-05-1994	M: -/-	A4		Check:	Dwg. no.: 07994950/A